42MM SINGLE LINE ROLLER SHUTTER

(Residential/Light Commercial)

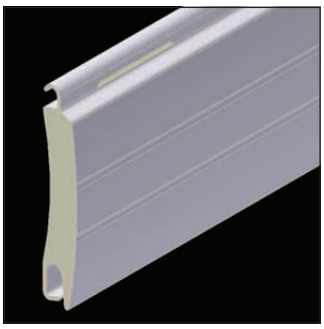

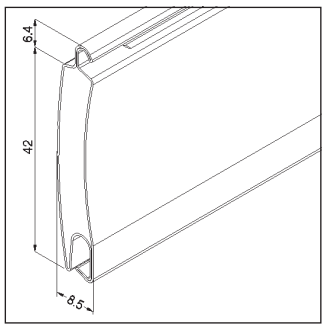

This roller shutter range is made with a precision roll formed roller shutter profile.

SUITABLE APPLICATIONS

- Domestic Windows.
- Domestic Doorways.
- Light Commercial Shop Fronts & Windows.
- Counter Tops/Serveries.

FEATURES

- High quality aluminium alloy construction.
- Foam filled profile for additional strength and smooth operation.
- High quality painted finish.
- Smooth and curved face profile.
- Roll-tight design.
- Wide range of colours.
- Double coated + lacquer for abrasion resistant finish.
- Machine inserted profile end clips providing extra shutter strength.
- High quality internal sealed bearings.
- Suitable for widths up to 3600mm.
- Can be manually operated or motorised.
- Made in Australia.

TECHNICAL SPECIFICATIONS

Maximum Shutter Width	3600mm
Maximum Shutter Height	2600mm
Maximum Surface Area	$8m^2$
Curtain Weight/Metre^2	3.2kg
Number Of Slats/Metre	24
Profile Slat Covering	42mm
Profile Slat Thickness	8.5mm
Axle Types	Octagonal Aluminium or Steel
Bottom Bar Dimensions	55mm x 8.5mm
Guide Dimensions	53mm x 22mm (68mm x 22mm/15mm Guide Upgrade available at additional cost)
Paint Finish	Polyurethane/Polyamide (PU/PA)
Inner Profile Foam Type	Poly Urethane (CFC Free)

General Note: All dimensions and colours are indicative only and may change without notice. Profile technical specifications and shutter performance may vary in certain applications, eg. wide applications with no solid structure behind the roller shutter. For more information please contact your CW Products representative.

CW ROLLER SHUTTER 5 YEAR GUARANTEE

MADE TO MEASURE ROLLER SHUTTERS

CW PRODUCTS
SHUTTERS & AUTOMATION

PELMET SIZES & MAXIMUM SHUTTER HEIGHT

Pelmet Box Size	Max. No. Of Slats	Max. Shutter Height (Including Pelmet)	Axle Size
150mm	29	1300mm	60mm
165mm	39	1700mm	60mm
180mm	51	2200mm	60mm
205mm	60	2600mm	60mm

WIND SPEEDS & MAXIMUM SHUTTER WIDTH

Wind Speed m/sec	Wind Speed km/h	Max. Shutter Width	Max. Surface Area
11.2m/sec	40km/h	3200mm	8m²
13m/sec	46km/h	3010mm	8m²
15.8m/sec	56km/h	2550mm	6.63m²
20.4m/sec	73km/h	2180mm	5.67m²
25.9m/sec	93km/h	1990mm	5.17m²
34.9m/sec	125km/h	1700mm	4.42m²

ROLLER SHUTTER COLOUR OPTIONS

Profiles

- Cream
- Magnolia Cream
- Clear Beige
- White
- Shale Grey
- Brown
- Beige
- Green
- Red
- Bronze *TBD*
- Black
- Monument
- Silver
- Deep Ocean
- Woodland Grey
- Jasper
- Surfmist
- Dune

Pelmets/Side Frames/ Guides/Bottom Bars

- Cream
- Magnolia Cream
- Clear Beige
- White
- Shale Grey
- Brown
- Black
- Monument
- Woodland Grey
- Surfmist

Powder coated options available (charges apply).

Coastal Treatment for side frames is strongly recommended for shutters installed close to beach or other salt water environments. Request Coastal Treatment on your order.

TBD - Product to be discontinued in the future or when stock is depleted.

CONTROL OPTIONS

Manual Options

Strap Winder (Up To 20Kg)*

Cord Winder (Up To 20Kg)*

Steel Cable Winder (Up To 50Kg)*

Strap Coiler (Up To 20Kg)*

Cord Coiler (Up To 20Kg)*

Spring Loaded With Key Lock

Motorised Options

Remote Control With SolarSmart™ Plus Automation 12V Motor*

PowerSmart™ Control System With 12V Motor*

Wall Switch With 240V Electric Motor*

Remote Control With 240V Electric SIMU Hz Motor*

Key Switch With 240V Electric Motor*

Crank Handle With 240V Electric Manual Override Motor

* Control options must be installed in an indoor environment.

To order please complete a **CW Products Made To Measure Roller Shutter Order Form**.